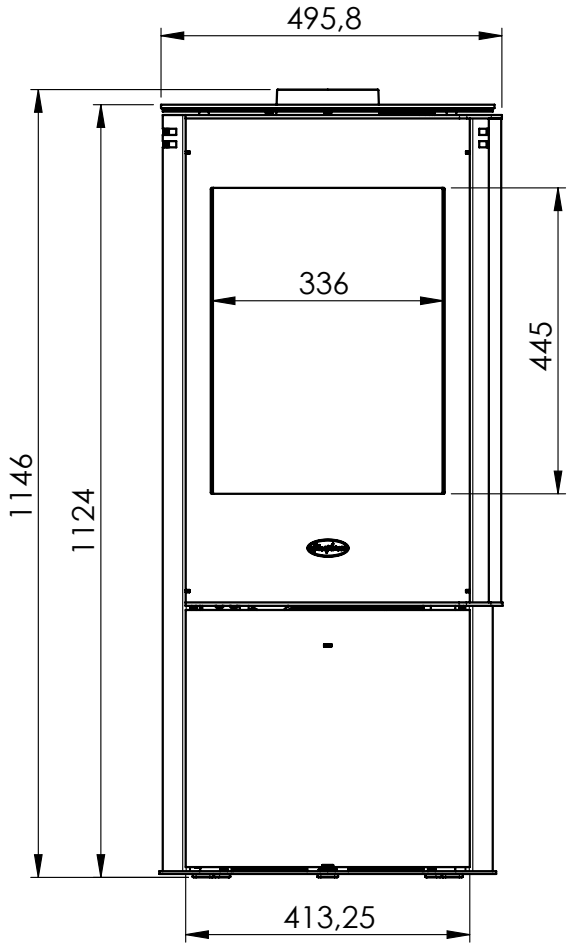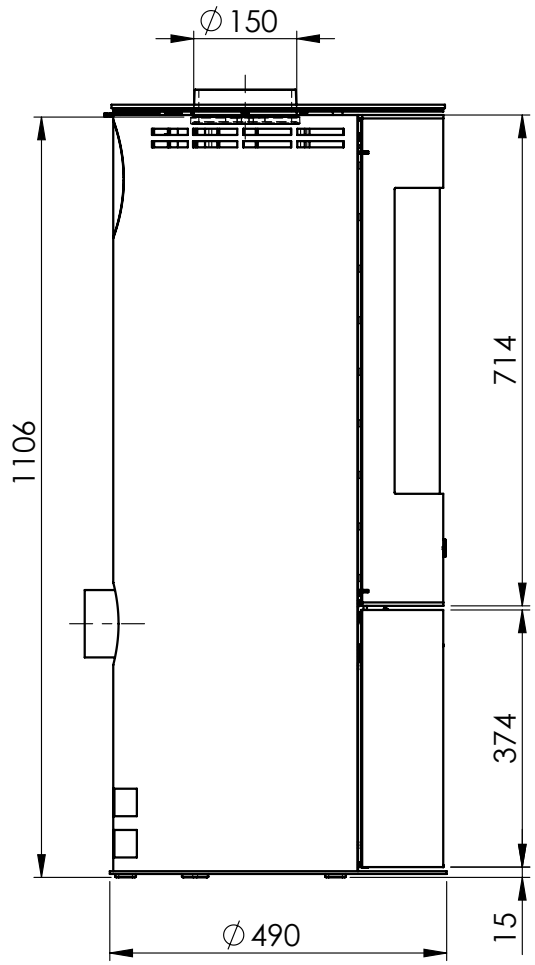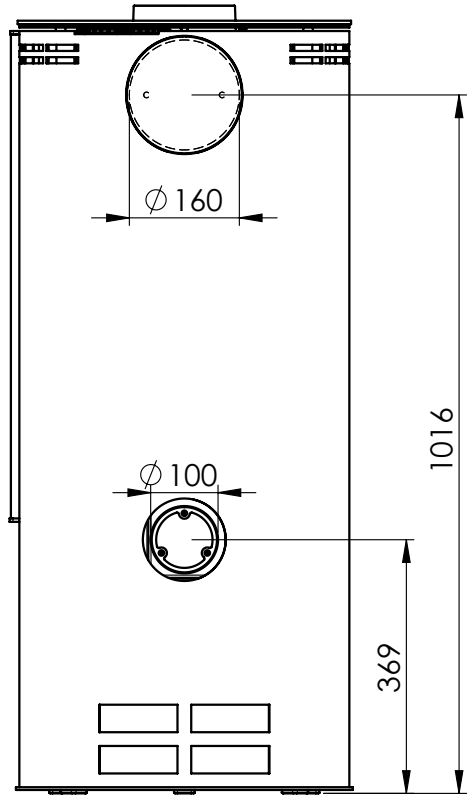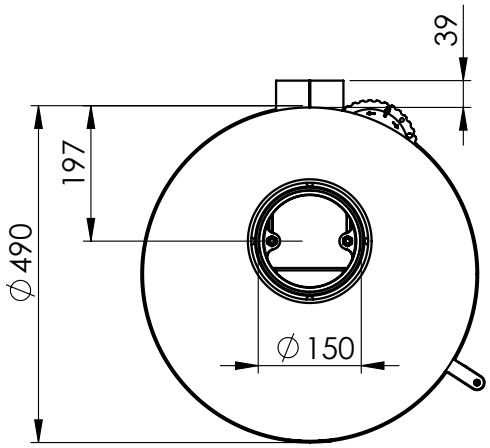Toronto Glas